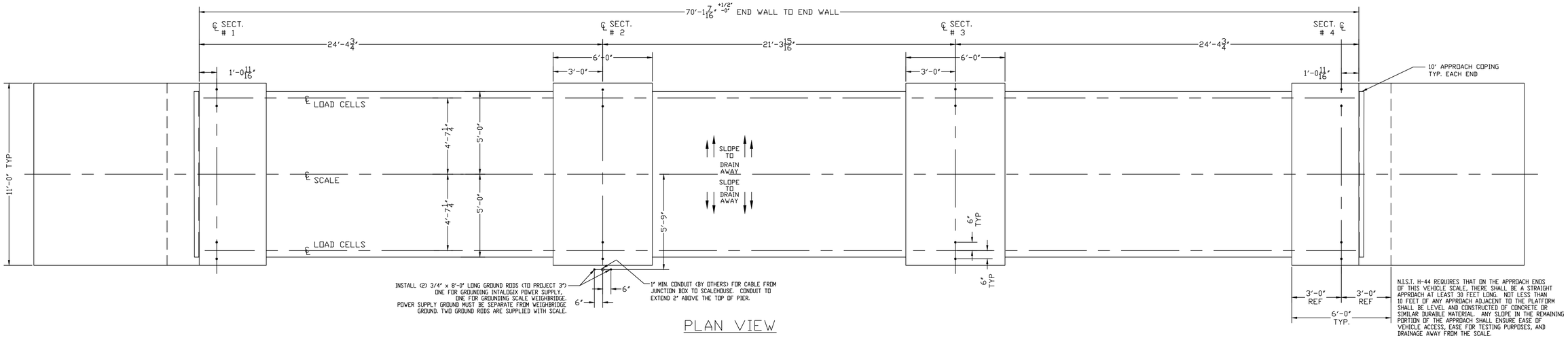

N.I.S.T. H-44 REQUIRES THAT ON THE APPROACH ENDS OF THIS VEHICLE SCALE, THERE SHALL BE A STRAIGHT APPROACH AT LEAST 30 FEET LONG. NOT LESS THAN 10 FEET OF ANY APPROACH ADJACENT TO THE PLATFORM SHALL BE LEVEL AND CONSTRUCTED OF CONCRETE OR SIMILAR DURABLE MATERIAL. ANY SLOPE IN THE REMAINING PORTION OF THE APPROACH SHALL ENSURE EASE OF VEHICLE ACCESS, EASE FOR TESTING PURPOSES, AND DRAINAGE AWAY FROM THE SCALE.

PLAN VIEW

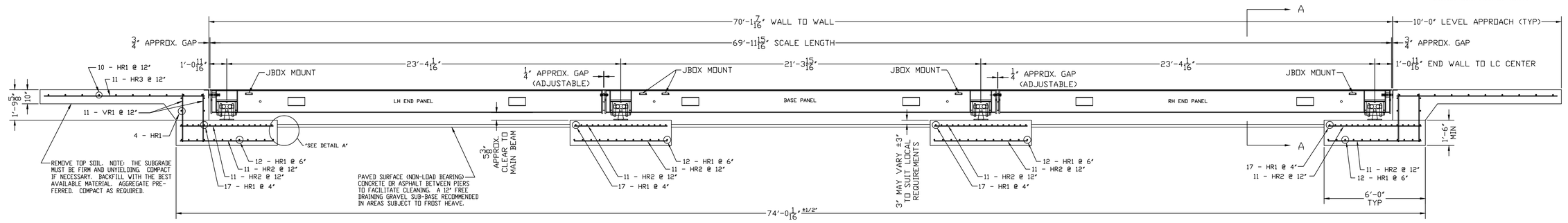

ELEVATION SECTION

NOTES:

1. FOUNDATION SHOWN IS DESIGNED FOR SOILS WITH A MINIMUM BEARING CAPACITY OF 3000 PSF AND ADEQUATE DRAINAGE. IF SOIL CONDITIONS DO NOT MEET THESE REQUIREMENTS, ADJUST FOUNDATION OR SOIL CONDITIONS AS REQUIRED.
2. IN AREAS OF THE COUNTRY WHERE THERE IS SEVERE FREEZING, INCREASE THE DEPTH OF THE FOUNDATION SO THAT THE BOTTOM EXTENDS BELOW THE FROST LINE, OR PROVIDE A MINIMUM OF 12" FREE DRAINING GRANULAR MATERIAL TO PREVENT FROST HEAVE.
3. N.I.S.T. H-44 REQUIREMENTS AND LOCAL WEIGHTS AND MEASURES REGULATIONS MAY REQUIRE INSTALLATION PARAMETERS SOMEWHAT DIFFERENT THAN ILLUSTRATED ON THIS PLAN. IN ORDER TO INSURE COMPLIANCE, CONSULT THE LOCAL WEIGHTS & MEASURES OFFICE PRIOR TO CONSTRUCTION.
4. REFER TO SCALE MANUAL FOR INSTALLATION AND OPERATION INSTRUCTIONS.
5. A MINIMUM OF 24" OF CLEARANCE IS REQUIRED ON JUNCTION BOX SIDE OF THE SCALE NEAR THE BOX MOUNTS.

FOUNDATION CONCRETE REQUIREMENTS 4000 P.S.I.	
AREA	QUANITIES
PIERS AS SHOWN	15 CU. YD.
APPROACHES	9 CU. YD.
FLOOR AT 2" THICK	3.5 CU. YD.
TOTAL	27.5 CU. YD.

FOUNDATION REINFORCING BAR SCHEDULE ASTM A615 GRADE 60				
MARK	NO. REQ'D.	SIZE	LENGTH	WT.
HR1	144	#4	10'-6"	1010
HR2	88	#4	5'-6"	323
HR3	22	#4	9'-6"	140
VR1	44	#4	2'-9"	81
			TOTAL WT:	1554

REINFORCING STEEL NOTES:

1. REINFORCING STEEL SHALL BE FREE OF ALL MUD, DEBRIS, CEMENT GROUT, LOOSE RUST, GREASE, AND OIL.
2. TACK WELDING OF BARS IS PROHIBITED.

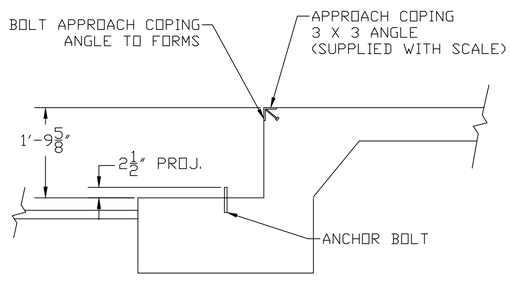

DRILL TYPE ANCHOR INFORMATION (DRILL TYPE ANCHORS PROVIDED WITH THE SCALE)
FOR THE LC STANDS (16 REQUIRED) 5/8 DIA X 6" STUD TYPE ANCHORS DRILL DIA 5/8", DRILL DEPTH 3 1/2"

ANCHOR DETAIL

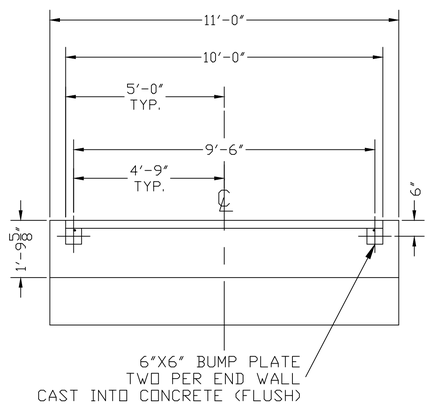

SECTION A-A END WALL/BUMPS

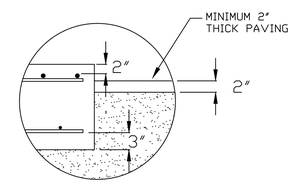

"DETAIL A"

THIS DRAWING IS SUPPLIED AS CHECKED BELOW:
- ☐ REFERENCE (ESTIMATES ONLY, NOT FOR CONSTRUCTION)
- ☐ CERTIFIED FOR CONSTRUCTION, THURMAN #
- CUSTOMER:
- CUSTOMER P.O.# DATE:
- ☐ CUSTOMER APPROVAL, RETURN ONE COPY. (ORDER ON HOLD UNTIL SIGNED COPY IS RETURNED)
- ☐ APPROVED AS DRAWN, APPROVED BY: DATE:
- ☐ APPROVED AS NOTED, APPROVED BY: DATE:

THE MATERIAL AND INFORMATION CONTAINED HEREIN IS CONFIDENTIAL AND IS THE PROPERTY OF THURMAN SCALE COMPANY AND IS NOT TO BE USED, DISCLOSED, COPIED, TRANSFERRED, OR REPRODUCED WITHOUT THE PRIOR WRITTEN PERMISSION OF THURMAN SCALE COMPANY.

UNLESS OTHERWISE SPECIFIED: DIMENSIONS ARE IN INCHES
TOLERANCES: FRACTIONS ±1/8" ANGLES ±1° 3-PLACE DECIMAL ±0.005 2-PLACE DECIMAL ±0.05 HOLE DIAMETERS ±1/32"

MATERIAL: A36 FINISH: N/A

LET	BY	DATE	REVISION
1	JCR	9/21/11	MOVED BASE MODULE TO CENTER OF SCALE

THURMAN SCALE COLUMBUS, OH

8560 DIAMONDBACK XD
130K CLC 70' X 10'
FOUNDATION (4 SECTION, DB LC)

DATE: 6/23/08
SCALE: N/A
SHEET 1 OF 1
DRAWN BY: NDC
MODEL:
CHECKED BY:
APPROVED BY:
DRAWING NUMBER: 92439-FT
REVISION: 1