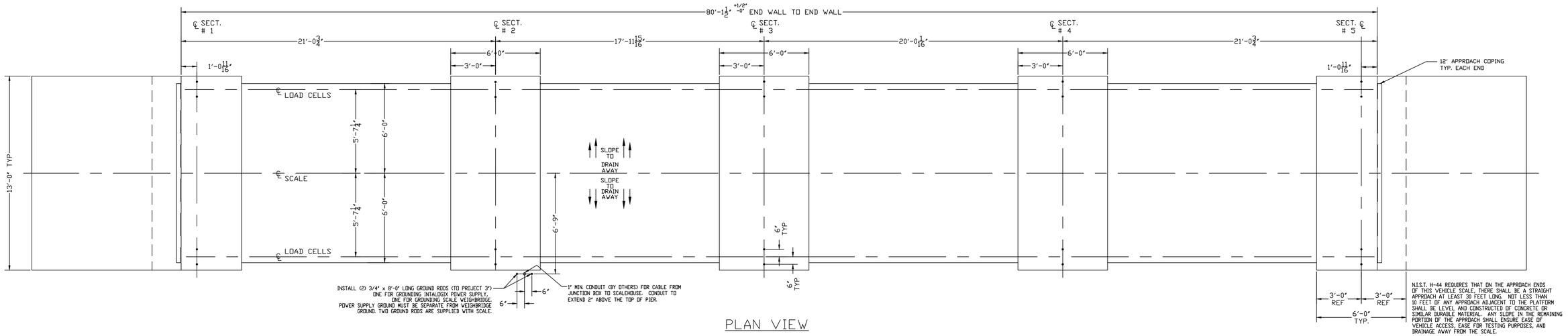

PLAN VIEW

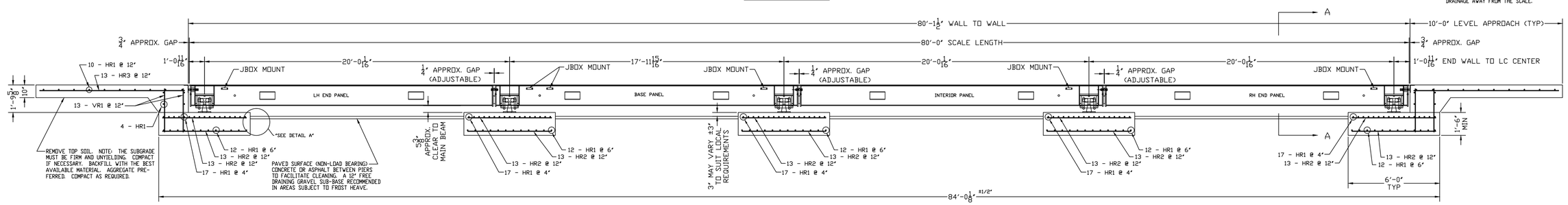

ELEVATION SECTION

NOTES:

1. FOUNDATION SHOWN IS DESIGNED FOR SOILS WITH A MINIMUM BEARING CAPACITY OF 3000 PSF AND ADEQUATE DRAINAGE. IF SOIL CONDITIONS DO NOT MEET THESE REQUIREMENTS, ADJUST FOUNDATION OR SOIL CONDITIONS AS REQUIRED.
2. IN AREAS OF THE COUNTRY WHERE THERE IS SEVERE FREEZING, INCREASE THE DEPTH OF THE FOUNDATION SO THAT THE BOTTOM EXTENDS BELOW THE FROST LINE, OR PROVIDE A MINIMUM OF 12" FREE DRAINING GRANULAR MATERIAL TO PREVENT FROST HEAVE.
3. N.I.S.T. H-44 REQUIREMENTS AND LOCAL WEIGHTS AND MEASURES REGULATIONS MAY REQUIRE INSTALLATION PARAMETERS SOMEWHAT DIFFERENT THAN ILLUSTRATED ON THIS PLAN. IN ORDER TO INSURE COMPLIANCE, CONSULT THE LOCAL WEIGHTS & MEASURES OFFICE PRIOR TO CONSTRUCTION.
4. REFER TO SCALE MANUAL FOR INSTALLATION AND OPERATION INSTRUCTIONS.
5. A MINIMUM OF 24" OF CLEARANCE IS REQUIRED ON JUNCTION BOX SIDE OF THE SCALE NEAR THE BOX MOUNTS.

FOUNDATION CONCRETE REQUIREMENTS 4000 P.S.I.	
AREA	QUANITIES
PIERS AS SHOWN	22 CU. YD.
APPROACHES	10.5 CU. YD.
FLOOR AT 2" THICK	4 CU. YD.
TOTAL	36.5 CU. YD.

FOUNDATION REINFORCING BAR SCHEDULE ASTM A615 GRADE 60				
MARK	NO. REQ'D.	SIZE	LENGTH	WT.
HR1	173	#4	12'-6"	1445
HR2	130	#4	5'-6"	478
HR3	26	#4	9'-6"	165
VR1	52	#4	2'-9"	96
		TOTAL WT:		2183

REINFORCING STEEL NOTES:

1. REINFORCING STEEL SHALL BE FREE OF ALL MUD, DEBRIS, CEMENT GROUT, LOOSE RUST, GREASE, AND OIL.
2. TACK WELDING OF BARS IS PROHIBITED.

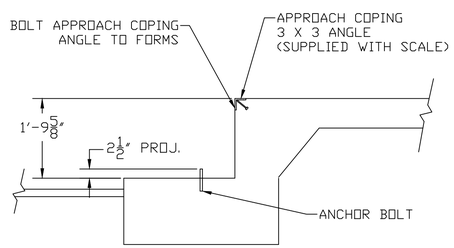

DRILL TYPE ANCHOR INFORMATION (DRILL TYPE ANCHORS PROVIDED WITH THE SCALE)
FOR THE LC STANDS (20 REQUIRED) 5/8 DIA X 6" STUD TYPE ANCHORS DRILL DIA 5/8", DRILL DEPTH 3 1/2"

ANCHOR DETAIL

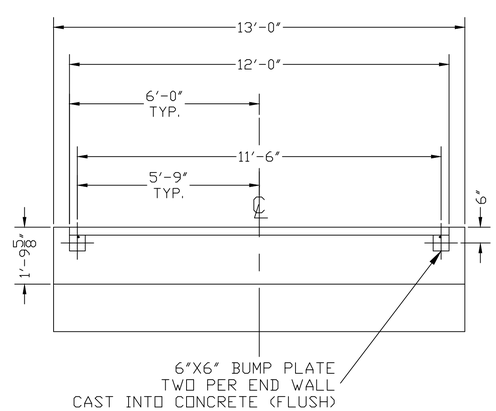

SECTION A-A END WALL/BUMPS

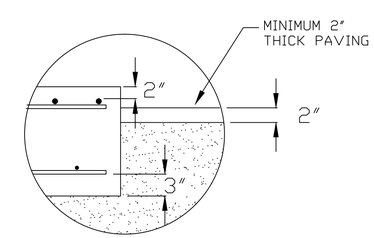

"DETAIL A"

LET	BY	DATE	REVISION
1	JCR	9/26/11	MOVED BASE MODULE TO CENTER OF SCALE

THURMAN SCALE
COLUMBUS, OH

8560 DIAMONDBACK XD
130K CLC 80' X 12'
FOUNDATION (5 SECTION, DB LC)

THIS DRAWING IS SUPPLIED AS CHECKED BELOW:
- ☐ REFERENCE (ESTIMATES ONLY, NOT FOR CONSTRUCTION)
- ☐ CERTIFIED FOR CONSTRUCTION, THURMAN #
- CUSTOMER:
- CUSTOMER P.O.# DATE:
- ☐ CUSTOMER APPROVAL, RETURN ONE COPY. (ORDER ON HOLD UNTIL SIGNED COPY IS RETURNED)
- ☐ APPROVED AS DRAWN, APPROVED BY: DATE:
- ☐ APPROVED AS NOTED, APPROVED BY: DATE:

THE MATERIAL AND INFORMATION CONTAINED HEREIN IS CONFIDENTIAL AND IS THE PROPERTY OF THURMAN SCALE COMPANY AND IS NOT TO BE USED, DISCLOSED, COPIED, TRANSFERRED, OR REPRODUCED WITHOUT THE PRIOR WRITTEN PERMISSION OF THURMAN SCALE COMPANY.

UNLESS OTHERWISE SPECIFIED: DIMENSIONS ARE IN INCHES
TOLERANCES: FRACTIONS ±1/8" ANGLES ±1° 1-PLACE DECIMAL ±0.05 2-PLACE DECIMAL ±0.03 HOLE DIAMETERS ±1/32"

MATERIAL	FINISH
A36	N/A

DATE	6/24/08
SCALE: N/A	SHEET 1 OF 1
DRAWN BY: NDC	MODEL:
CHECKED BY:	DRAWING NUMBER: 92445-FT
APPROVED BY:	REVISION: 1