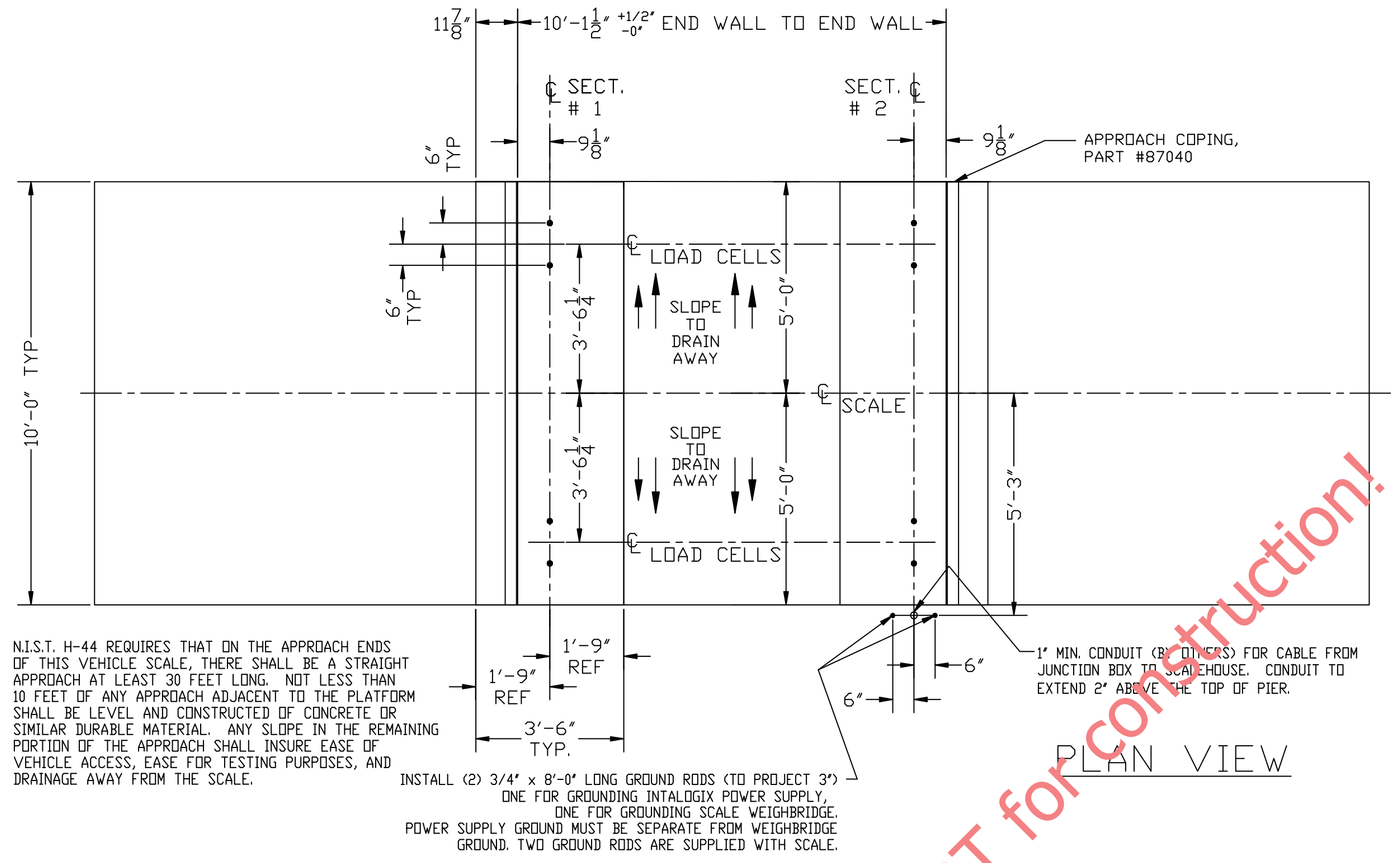

N.I.S.T. H-44 REQUIRES THAT ON THE APPROACH ENDS OF THIS VEHICLE SCALE, THERE SHALL BE A STRAIGHT APPROACH AT LEAST 30 FEET LONG. NOT LESS THAN 10 FEET OF ANY APPROACH ADJACENT TO THE PLATFORM SHALL BE LEVEL AND CONSTRUCTED OF CONCRETE OR SIMILAR DURABLE MATERIAL. ANY SLOPE IN THE REMAINING PORTION OF THE APPROACH SHALL INSURE EASE OF VEHICLE ACCESS, EASE FOR TESTING PURPOSES, AND DRAINAGE AWAY FROM THE SCALE.

PLAN VIEW

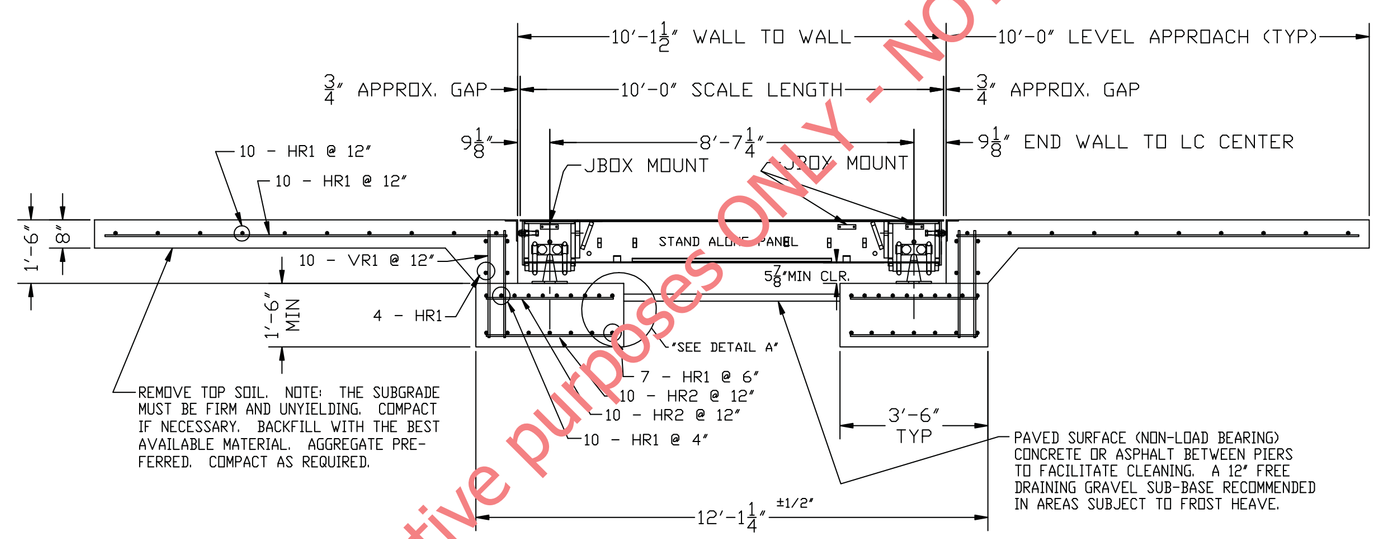

ELEVATION SECTION

For illustrative purposes ONLY - NOT for construction!

FOUNDATION CONCRETE REQUIREMENTS 4000 P.S.I.	
AREA	QUANITIES
PIERS AS SHOWN	4 CU. YD.
APPROACHES	6 CU. YD.
FLOOR AT 2" THICK	0.5 CU. YD.
TOTAL	10.5 CU. YD.

FOUNDATION REINFORCING BAR SCHEDULE ASTM A615 GRADE 60				
MARK	NO. REQ'D.	SIZE	LENGTH	WT.
HR1	82	#4	9'-6"	521
HR2	40	#4	3'-0"	80
VR1	40	#4	2'-6"	67
			TOTAL WT:	668

REINFORCING STEEL NOTES:

1. REINFORCING STEEL SHALL BE FREE OF ALL MUD, DEBRIS, CEMENT GROUT, LOOSE RUST, GREASE, AND OIL.
2. TACK WELDING OF BARS IS PROHIBITED.

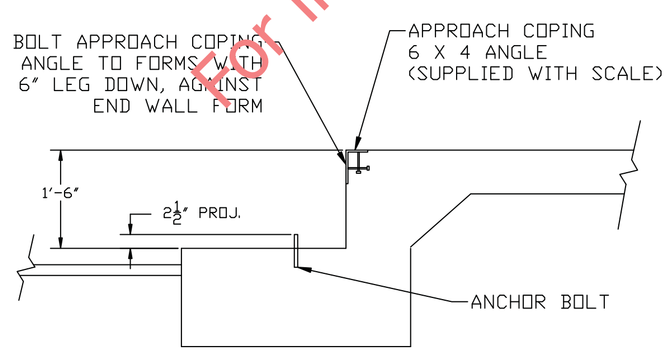

DRILL TYPE ANCHOR INFORMATION (DRILL TYPE ANCHORS PROVIDED WITH THE SCALE)
FOR THE LC STANDS (8 REQUIRED) 5/8 DIA X 6" STUD TYPE ANCHORS DRILL DIA 5/8", DRILL DEPTH 3 1/2"

ANCHOR DETAIL

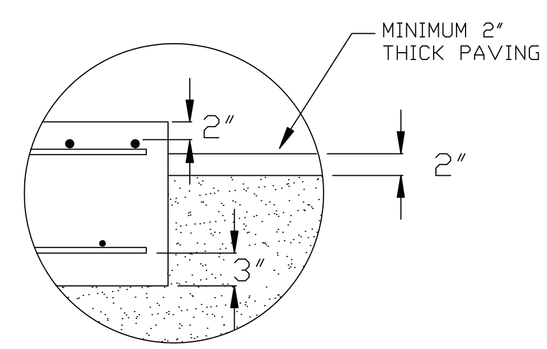

"DETAIL A"

NOTES:

1. FOUNDATION SHOWN IS DESIGNED FOR SOILS WITH A MINIMUM BEARING CAPACITY OF 3000 PSF AND ADEQUATE DRAINAGE. IF SOIL CONDITIONS DO NOT MEET THESE REQUIREMENTS, ADJUST FOUNDATION OR SOIL CONDITIONS AS REQUIRED.
2. IN AREAS OF THE COUNTRY WHERE THERE IS SEVERE FREEZING, INCREASE THE DEPTH OF THE FOUNDATION SO THAT THE BOTTOM EXTENDS BELOW THE FROST LINE, OR PROVIDE A MINIMUM OF 12" FREE DRAINING GRANULAR MATERIAL TO PREVENT FROST HEAVE.
3. N.I.S.T. H-44 REQUIREMENTS AND LOCAL WEIGHTS AND MEASURES REGULATIONS MAY REQUIRE INSTALLATION PARAMETERS SOMEWHAT DIFFERENT THAN ILLUSTRATED ON THIS PLAN. IN ORDER TO INSURE COMPLIANCE, CONSULT THE LOCAL WEIGHTS & MEASURES OFFICE PRIOR TO CONSTRUCTION.
4. REFER TO SCALE MANUAL FOR INSTALLATION AND OPERATION INSTRUCTIONS.
5. A MINIMUM OF 24" OF CLEARANCE IS REQUIRED ON JUNCTION BOX SIDE OF THE SCALE NEAR THE BOX MOUNTS.

THIS DRAWING IS SUPPLIED AS CHECKED BELOW:
☐ REFERENCE (ESTIMATES ONLY, NOT FOR CONSTRUCTION)
☐ CERTIFIED FOR CONSTRUCTION, THURMAN#
CUSTOMER:
CUSTOMER P.O.# DATE:
☐ CUSTOMER APPROVAL, RETURN ONE COPY.
(ORDER ON HOLD UNTIL SIGNED COPY IS RETURNED)
☐ APPROVED AS DRAWN, APPROVED BY: DATE:
☐ APPROVED AS NOTED, APPROVED BY: DATE:

TOLERANCES (UNLESS OTHERWISE SPECIFIED) ± 1/8"
DIMENSIONS ARE IN INCHES (UNLESS OTHERWISE SPECIFIED)
THIRD ANGLE PROJECTION

THURMAN scale
255 E. LIVINGSTON AVE.
COLUMBUS, OHIO 43215
PH: (614) 221-9077
FAX: (614) 221-8879

DATE: 10/14/09
DRAWN BY: NDC

This drawing is the property of Thurman Scale Company and is loaned to the recipient for his/her confidential use only. In consideration of the loan of this drawing, the recipient promises and agrees that it shall not be used in any way detrimental to the interest of Thurman Scale Company, that it shall be returned upon request, and that it shall not be reproduced, copied, loaned or otherwise disposed of, directly or indirectly without the express written consent of Thurman Scale Company.

TITLE
8560 DIAMONDBACK 90K CLC 10' X 10'
FOUNDATION (2 SECTION, DB LC)

DRAWING NUMBER 92365-FT
REV