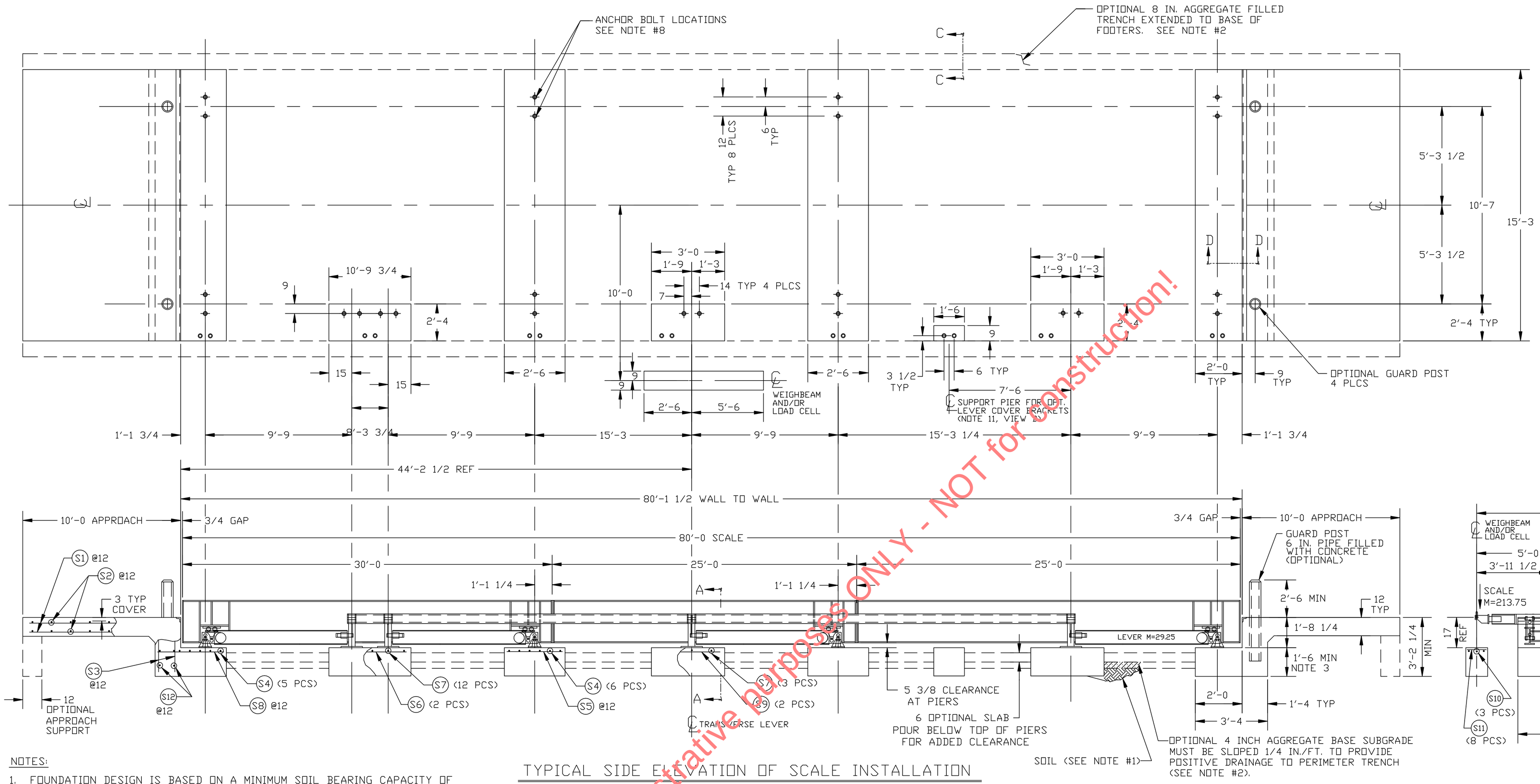

TYPICAL SIDE ELEVATION OF SCALE INSTALLATION

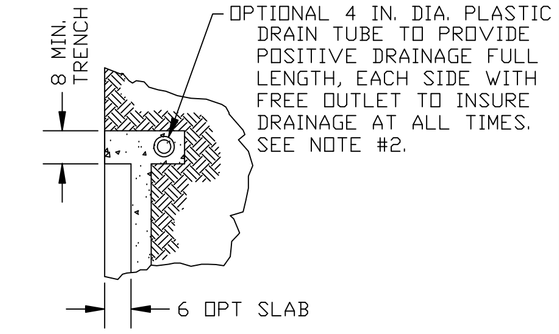

SECTION C-C

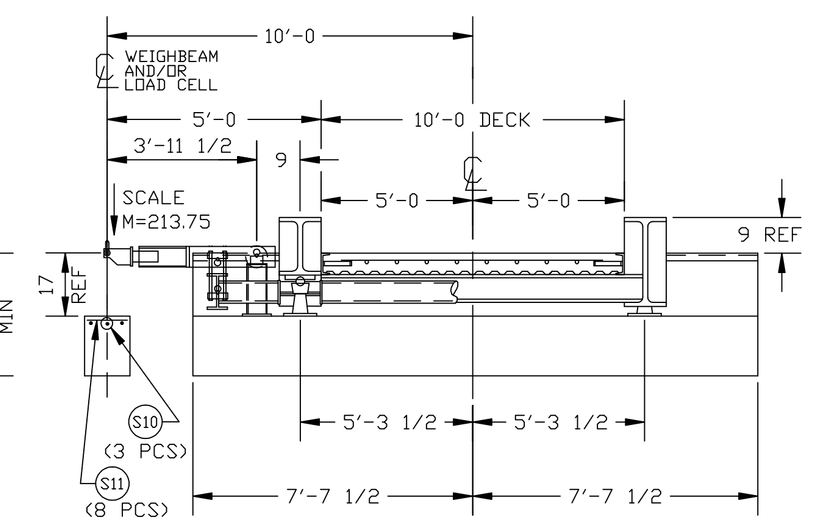

SECTION A-A

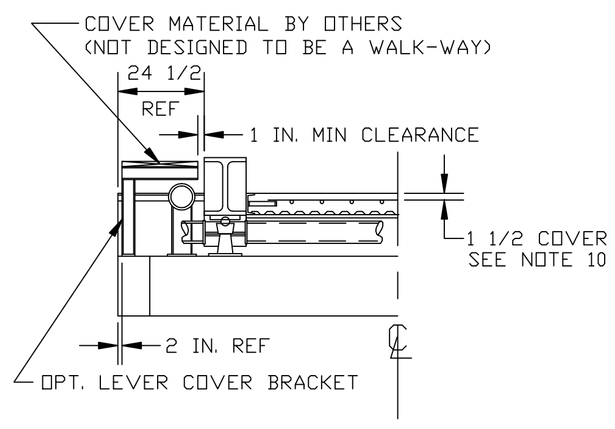

VIEW B

NOTES:

1. FOUNDATION DESIGN IS BASED ON A MINIMUM SOIL BEARING CAPACITY OF 3000 LB/SQ. FT. FOR SOIL CONDITIONS WHICH DO NOT MEET THIS SPECIFICATION, CONSULT WITH THE THURMAN SCALE COMPANY.
2. THE FOUNDATION SHALL BE INSTALLED AT AN ELEVATION AND LOCATION TO INSURE ADEQUATE DRAINAGE AWAY FROM SCALE. A PERIMETER TRENCH AND AGGREGATE BASE MAY BE ADDED IF DRAINAGE IS NOT SUFFICIENT TO MAINTAIN 3000 LB/SQ. FT. BEARING CAPACITY.
3. BOTTOM OF FOOTERS SHOULD EXTEND BELOW THE FROST LINE AND BE POURED MONOLITHICALLY WITH THE 10 FT. APROACHES AND OPTIONAL SLAB OR OPTIONAL APPROACH SUPPORTS. A 18 INCH FOOTER DEPTH IS MINIMUM.
4. REINFORCING STEEL IS TO CONFORM TO ASTM A615 GRADE 60 SPECIFICATIONS.
5. CONCRETE OF 4000 PSI MINIMUM COMPRESSIVE STRENGTH IS REQUIRED FOR FOUNDATION. VIBRATE CONCRETE WHEN POURING. FOLLOW AMERICAN CONCRETE INSTITUTE (ACI) REQUIREMENTS FOR MATERIALS AND CONSTRUCTION.
6. PIERS MUST BE LEVEL AND IN THE SAME PLANE WITHIN ±1/8 INCH.
7. EXCAVATION, FORMS, REINFORCING STEEL, GUARD POSTS, APPROACH COPING, ANCHOR BOLTS, AND CONCRETE FURNISHED BY OTHERS.
8. ANCHOR BOLTS MAY EITHER BE POURED IN PLACE, OR DRILLED (SECTION D-D). DO NOT PLACE REBAR IN CLOSE PROXIMITY OF ANCHOR BOLTS.
9. FOUNDATION REQUIREMENTS VARY FROM STATE TO STATE. CHECK WITH LOCAL WEIGHTS AND MEASURES DIVISION BEFORE CONSTRUCTION.
10. SCALE DECK IS SUPPLIED WITH REBAR GRID IN PLACE, READY TO POUR CONCRETE (APPROX. 15 CU.YDS. REQUIRED). CONCRETE OF 4000 PSI MIN. COMPRESSIVE STRENGTH WITH AIR ENTRAINMENT OF 6% +/- 1 1/2% IF SUBJECT TO FREEZE/THAW CYCLES. CONSOLIDATE CONCRETE INTO PLACE BY VIBRATING.
11. LEVER COVER BRACKETS (OPTIONAL) ARE RECOMMENDED. A MINIMUM OF (9) BRACKETS ARE REQUIRED FOR A 80' SCALE. BRACKETS MOUNT TO PIERS USING (2) ANCHORS (DRILL TYPE, USING BRACKET AS TEMPLATE IS RECOMMENDED).

APPROX. EXCAVATION W/O OPTIONS		95 CU. YDS.
CONCRETE	PIERS (*)	12 1/2 CU. YDS.
	APPROACHES/WALLS	12 1/2 CU. YDS.
	OPTIONAL SLAB	20 CU. YDS.
	OPTIONAL APPROACH SUPPORT	2 1/2 CU. YDS.

(*) PIERS CONCRETE QUANTITY IS CALCULATED FOR 18 INCH FOOTER DEPTH.

REBAR PLACEMENT SCHEDULE

SYM.	QTY.	SIZE	LENGTH	TOTAL WT.	REMARKS
S1	60	#4	9'-6	381 LBS.	(30)EACH APPROACH TOP & BTM
S2	40	#4	14'-9	394 LBS.	(20)EACH APPROACH TOP & BTM
S3	60	#4	2'-6	100 LBS.	(30)EACH END WALL VERT
S4	22	#6	14'-9	487 LBS.	(5)END PIERS (6)CENTER PIERS
S5	30	#4	2'-0	40 LBS.	(15)EACH CENTER PIER
S6	2	#4	10'-0	14 LBS.	FULCRUM PIER
S7	18	#4	2'-0	24 LBS.	FULCRUM PIER
S8	30	#4	2'-9	55 LBS.	(15)EACH END PIER
S9	4	#4	2'-6	7 LBS.	FULCRUM PIER
S10	3	#4	7'-6	15 LBS.	WEIGHBEAM/LC PIER
S11	8	#4	1'-0	6 LBS.	WEIGHBEAM/LC PIER
S12	8	#4	14'-9	79 LBS.	(4)EACH END WALL

TOTAL REBAR WEIGHT 1,603 LBS.

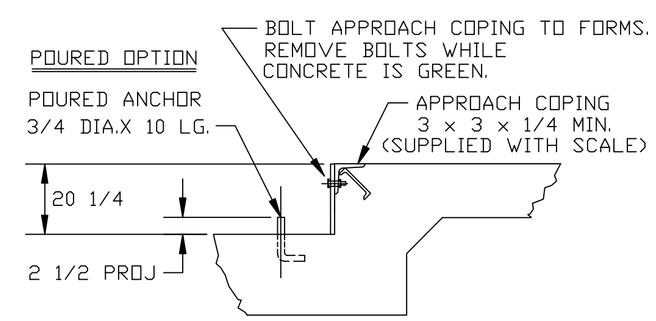

SECTION D-D

DRILLED TYPE ANCHOR INFORMATION
5/8 X 6" STUD TYPE ANCHORS DRILL DIA. 5/8", DRILL DEPTH 3 1/2". (DRILL TYPE ANCHORS ARE PROVIDED WITH THE SCALE)

NO.	DATE	BY	REVISION
0	06/00	HAWK	UPDATED TO READY-TO-POUR DESIGN

UNLESS OTHERWISE SPECIFIED ALL DIMENSIONS ARE IN INCHES
TOLERANCES (UNLESS OTHERWISE SPECIFIED)
DECIMAL | FRACTIONAL | ANGULAR
SCALE DO NOT SCALE DRAWING
THIRD ANGLE PROJECTION

THURMAN scale
255 E. LIVINGSTON AVE.
COLUMBUS, OHIO 43215
PH: (614) 221-9077
FAX: (614) 221-8879

This drawing is the property of Thurman Scale Company and is loaned to the recipient for his/her confidential use only. In consideration of the loan of this drawing, the recipient promises and agrees that it shall not be used in any way detrimental to the interest of Thurman Scale Company, that it shall be returned upon request, and that it shall not be reproduced, copied, loaned or otherwise disposed of, directly or indirectly without the express written consent of Thurman Scale Company.

TITLE 8130 55K CLC 70' X 10'
FOUNDATION 4 SECT. READY-TO-POUR

DATE: 06-16-00
DRAWN BY: HAWKINS
DRAWING NUMBER 92026-FT
REV 0

ACAD FILE 92026FTO

For illustrative purposes ONLY - NOT for construction!