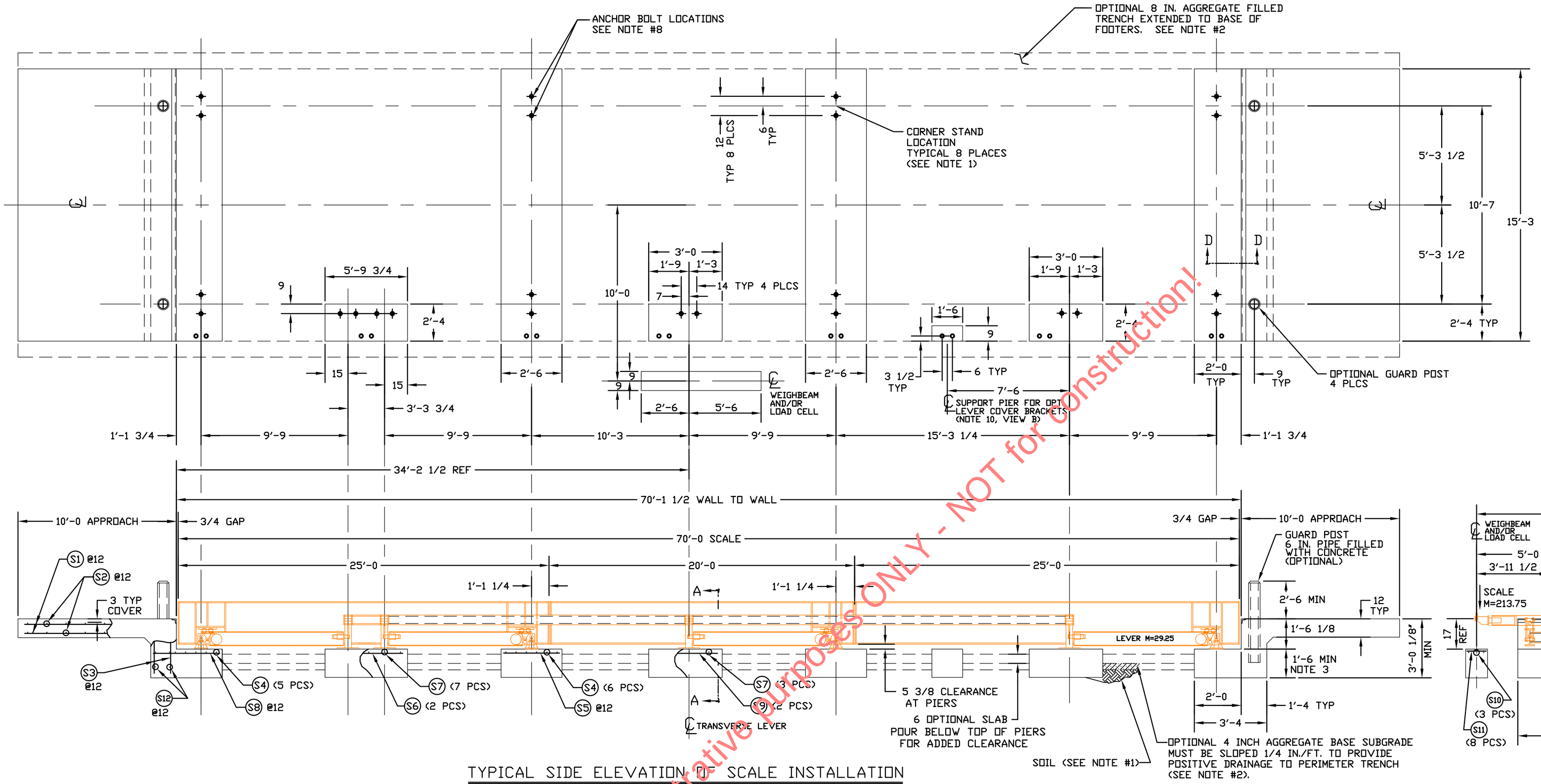

TYPICAL SIDE ELEVATION OF SCALE INSTALLATION

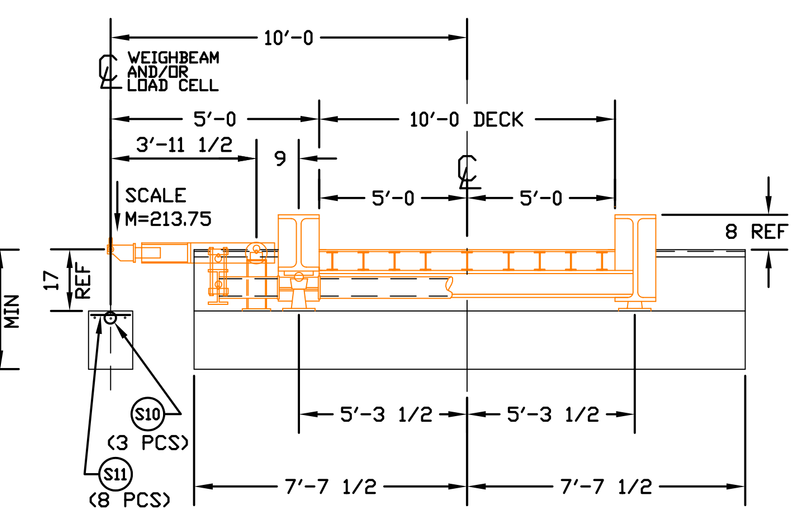

SECTION A-A

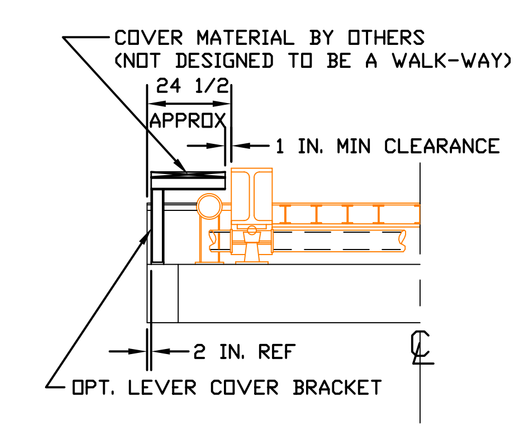

VIEW B

NOTES:

1. FOUNDATION DESIGN IS BASED ON A MINIMUM SOIL BEARING CAPACITY OF 3000 LB/SQ. FT. FOR SOIL CONDITIONS WHICH DO NOT MEET THIS SPECIFICATION, CONSULT WITH THE THURMAN SCALE COMPANY. PIER LOADING IS 35 KIP MAXIMUM AT ANY ONE CORNER STAND LOCATION AND 60 KIPS MAXIMUM AT ANY ONE SECTION (SCALE LIVE LOAD PLUS DEAD LOAD).
2. THE FOUNDATION SHALL BE INSTALLED AT AN ELEVATION AND LOCATION TO INSURE ADEQUATE DRAINAGE AWAY FROM SCALE. A PERIMETER TRENCH AND AGGREGATE BASE MAY BE ADDED IF DRAINAGE IS NOT SUFFICIENT TO MAINTAIN 3000 PSF BEARING CAPACITY.
3. BOTTOM OF FOOTERS SHOULD EXTEND BELOW THE FROST LINE AND BE POURED MONOLITHICALLY WITH THE 10 FT. APROACHES AND OPTIONAL SLAB OR OPTIONAL APPROACH SUPPORTS. A 18 INCH FOOTER DEPTH IS MINIMUM.
4. REINFORCING STEEL IS TO CONFORM TO ASTM A615 GRADE 60 SPECIFICATIONS.
5. CONCRETE OF 4000 PSI MINIMUM COMPRESSIVE STRENGTH IS REQUIRED FOR FOUNDATION. VIBRATE CONCRETE WHEN POURING. FOLLOW AMERICAN CONCRETE INSTITUTE (ACI) REQUIREMENTS FOR MATERIALS AND CONSTRUCTION.
6. PIERS MUST BE LEVEL AND IN THE SAME PLANE WITHIN ±1/8 INCH.
7. EXCAVATION, FORMS, REINFORCING STEEL, GUARD POSTS, AND CONCRETE BY OTHERS.
8. ANCHOR BOLTS MAY EITHER BE POURED IN PLACE, OR DRILLED (SECTION D-D). DO NOT PLACE REBAR IN CLOSE PROXIMITY OF ANCHOR BOLTS.
9. FOUNDATION REQUIREMENTS VARY FROM STATE TO STATE. CHECK WITH LOCAL WEIGHTS AND MEASURES DIVISION BEFORE CONSTRUCTION.
10. LEVER COVER BRACKETS (OPTIONAL) ARE RECOMMENDED. A MINIMUM OF (8) BRACKETS ARE REQUIRED FOR A 70' SCALE. BRACKETS MOUNT TO PIERS USING (2) ANCHORS (DRILL TYPE, USING BRACKET AS TEMPLATE IS RECOMMENDED).

APPROX. EXCAVATION W/O OPTIONS		83 CU. YDS.
CONCRETE	PIERS (*)	12 1/2 CU. YDS.
	APPROACHES/WALLS	12 CU. YDS.
	OPTIONAL SLAB (6" THICK)	17 CU. YDS.

(*) PIERS CONCRETE QUANTITY IS CALCULATED FOR 18 INCH FOOTER DEPTH.

REBAR PLACEMENT SCHEDULE

SYM.	QTY.	SIZE	LENGTH	TOTAL WT.	REMARKS
S1	60	#4	9'-6	381 LBS.	(30)EACH APPROACH TOP & BTM
S2	40	#4	14'-9	394 LBS.	(20)EACH APPROACH TOP & BTM
S3	60	#4	2'-6	100 LBS.	(30)EACH END WALL VERT
S4	22	#6	14'-9	487 LBS.	(5)END PIERS (6)CENTER PIERS
S5	30	#4	2'-0	40 LBS.	(15)EACH CENTER PIER
S6	2	#4	5'-0	7 LBS.	FULCRUM PIER
S7	13	#4	2'-0	18 LBS.	FULCRUM PIER
S8	30	#4	2'-9	55 LBS.	(15)EACH END PIER
S9	4	#4	2'-6	7 LBS.	FULCRUM PIER
S10	3	#4	7'-6	15 LBS.	WEIGHBEAM/LC PIER
S11	8	#4	1'-0	6 LBS.	WEIGHBEAM/LC PIER
S12	8	#4	14'-9	79 LBS.	(4)EACH END WALL
TOTAL REBAR WEIGHT 1,589 LBS.					

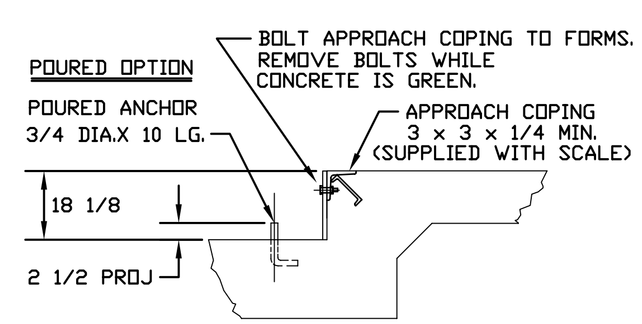

DETAIL D

DRILLED TYPE ANCHOR INFORMATION
5/8 X 6" STUD TYPE ANCHORS DRILL DIA. 5/8", DRILL DEPTH 3 1/2". (DRILL TYPE ANCHORS ARE PROVIDED WITH THE SCALE)

PDF illustrative purposes ONLY - NOT for construction!

THIS DRAWING IS SUPPLIED AS CHECKED BELOW:
☐ REFERENCE (ESTIMATES ONLY, NOT FOR CONSTRUCTION)
☐ CERTIFIED FOR CONSTRUCTION, THURMAN#
CUSTOMER:
CUSTOMER P.O.# DATE:
☐ CUSTOMER APPROVAL, RETURN ONE COPY.
(ORDER ON HOLD UNTIL SIGNED COPY IS RETURNED)
☐ APPROVED AS DRAWN, APPROVED BY: DATE:
☐ APPROVED AS NOTED, APPROVED BY: DATE:

TOLERANCES (UNLESS OTHERWISE SPECIFIED) ± 1/8"
DIMENSIONS ARE IN INCHES (UNLESS OTHERWISE SPECIFIED)
THIRD ANGLE PROJECTION

THURMAN scale
255 E. LIVINGSTON AVE.
COLUMBUS, OHIO 43215
PH: (614) 221-9077
FAX: (614) 221-8879

This drawing is the property of Thurman Scale Company and is loaned to the recipient for his/her confidential use only. In consideration of the loan of this drawing, the recipient promises and agrees that it shall not be used in any way detrimental to the interest of Thurman Scale Company, that it shall be returned upon request, and that it shall not be reproduced, copied, loaned or otherwise disposed of, directly or indirectly without the express written consent of Thurman Scale Company.

TITLE
8140 55K CLC 70' X 10' FOUNDATION
4 SECTION, 6" PIPE LEVER SYSTEM

DATE: 04-03-02
DRAWN BY: HAWKINS
DRAWING NUMBER 92037-FT
REV 0